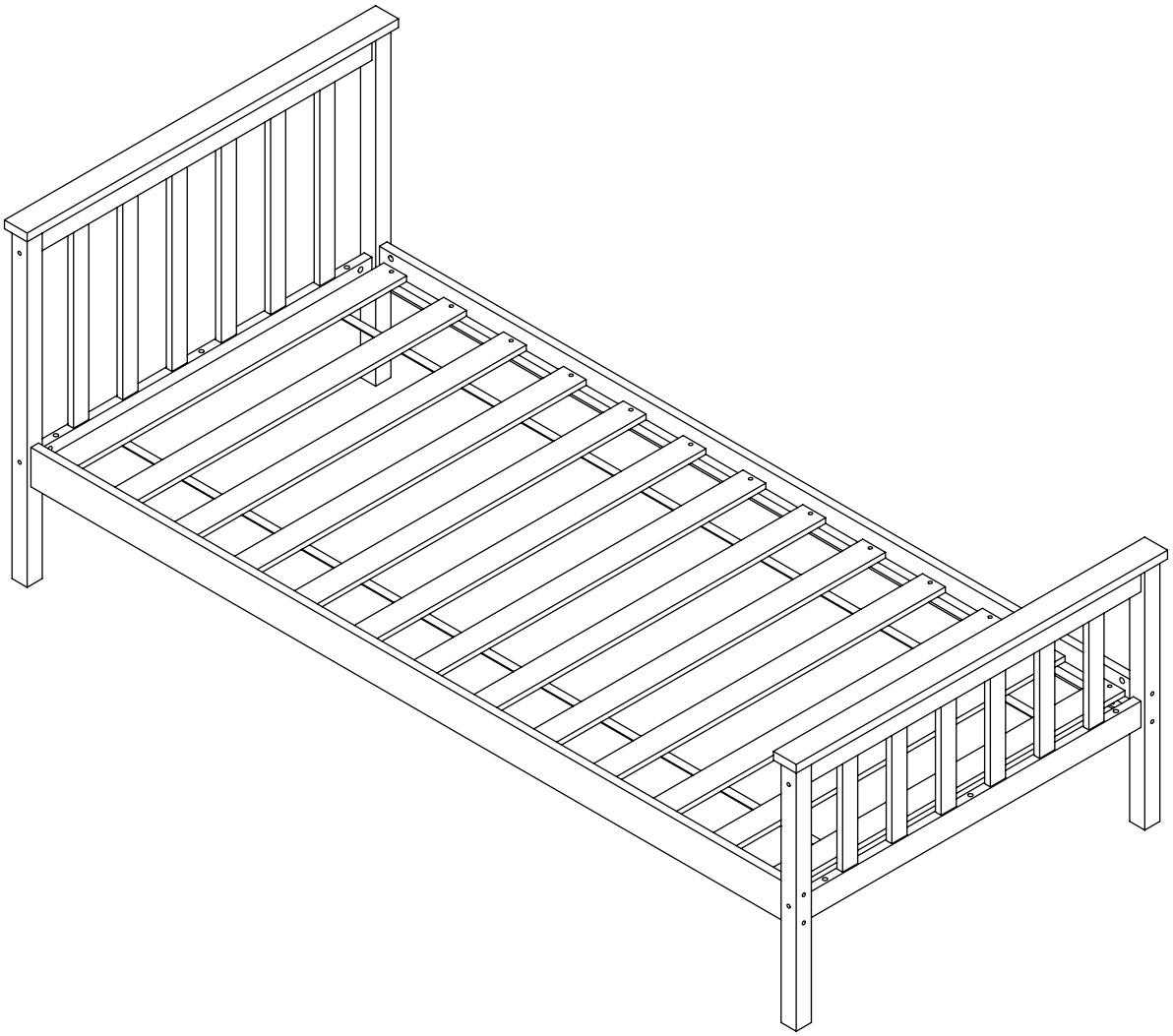

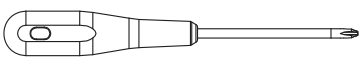

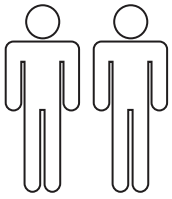

03

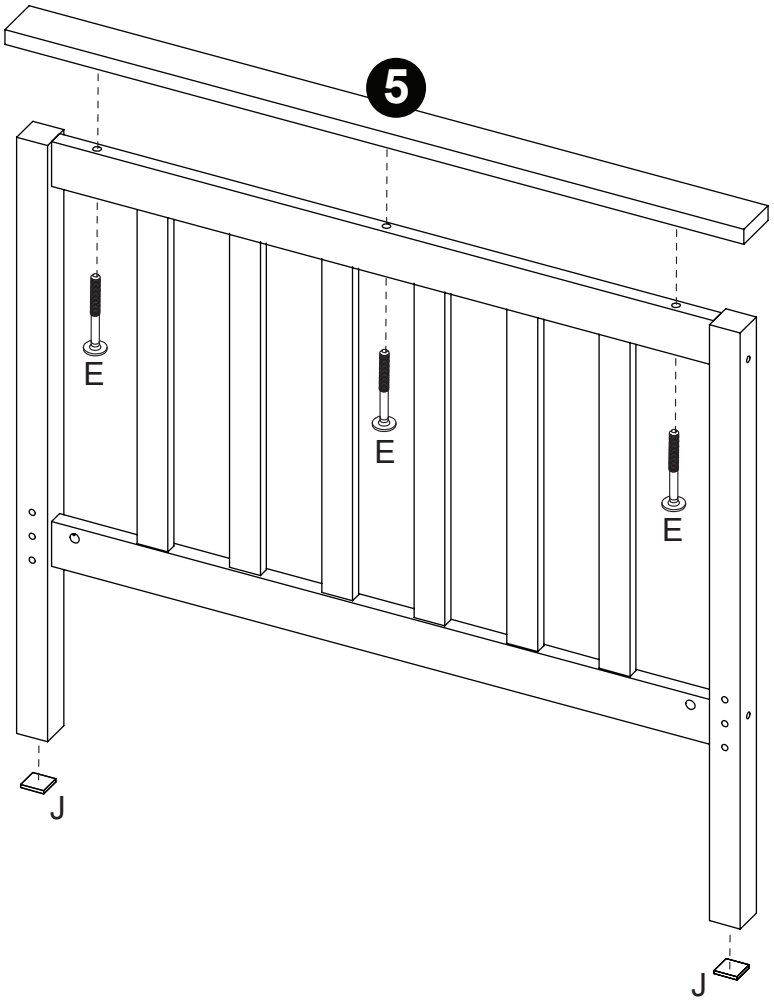
5
E
E
E
J
J

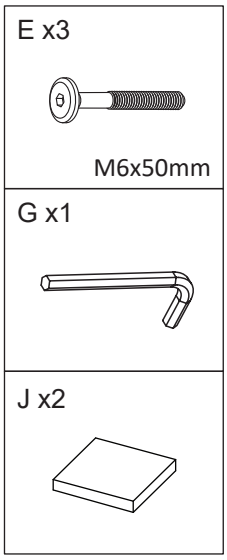
E x3
M6x50mm
G x1
J x2

04

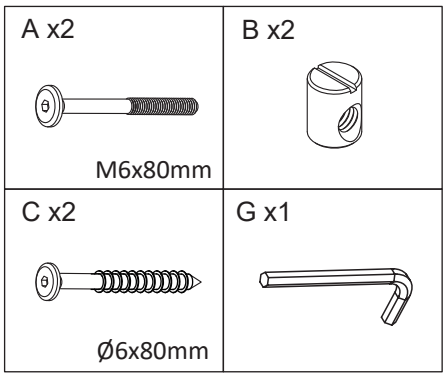
A x2
M6x80mm
B x2
C x2
Ø6x80mm
G x1

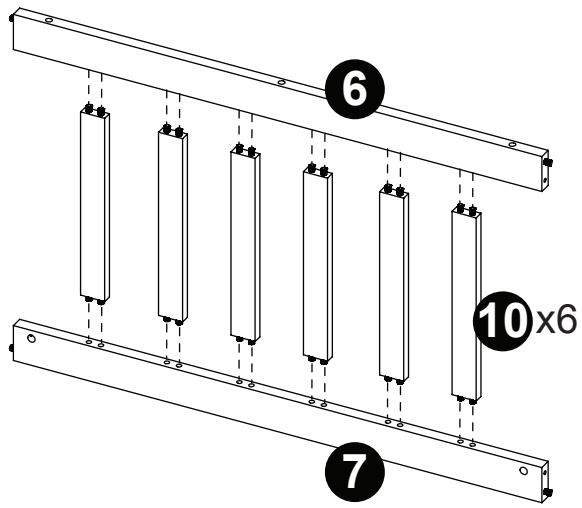
6
10 x6
7

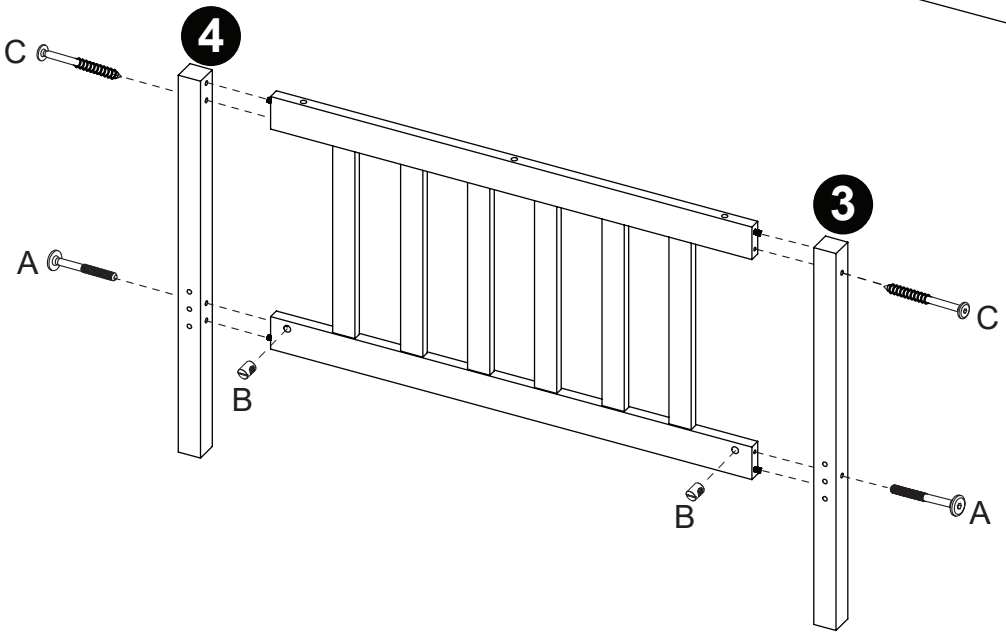
4
C
A
B
3
C
B
A

05

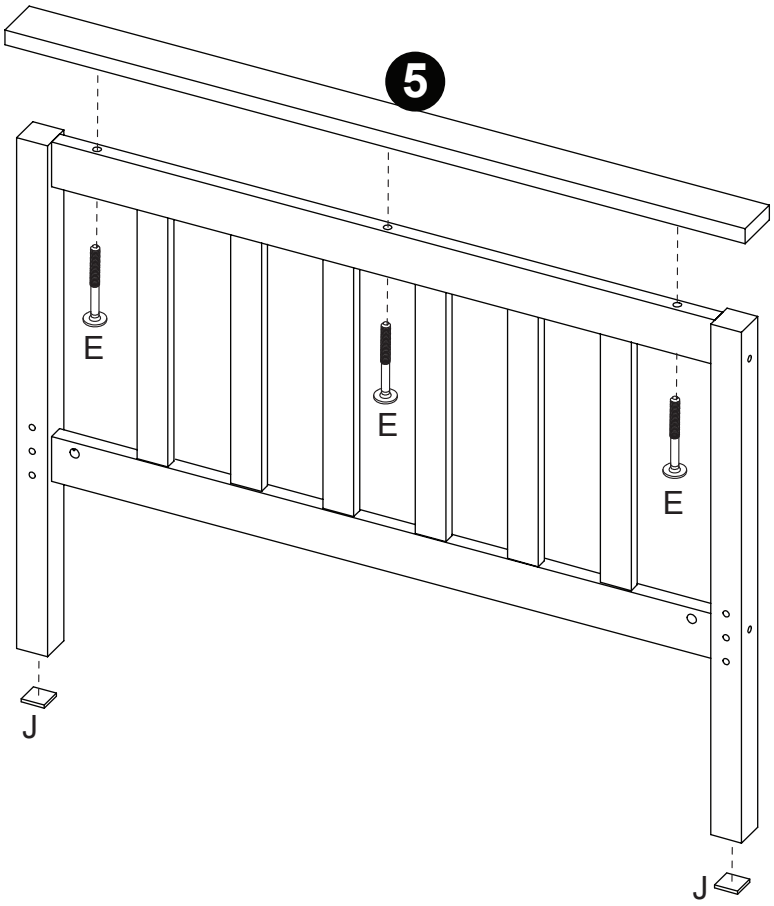

E x3



M6x50mm

G x1



J x2

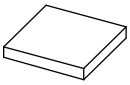

06

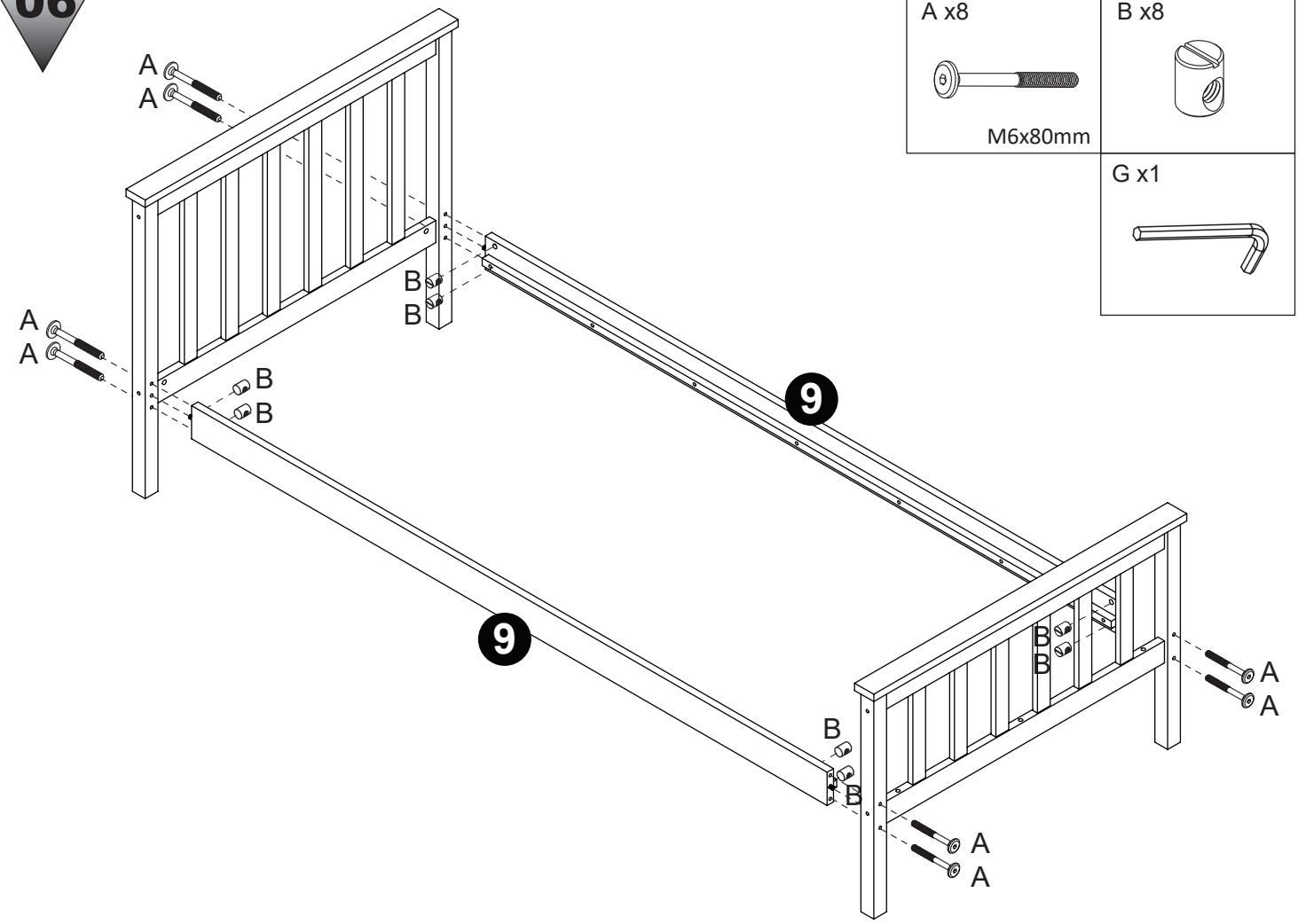

A x8

M6x80mm

B x8

G x1

07

F x26

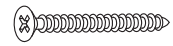

Ø4x30mm

