361-000019

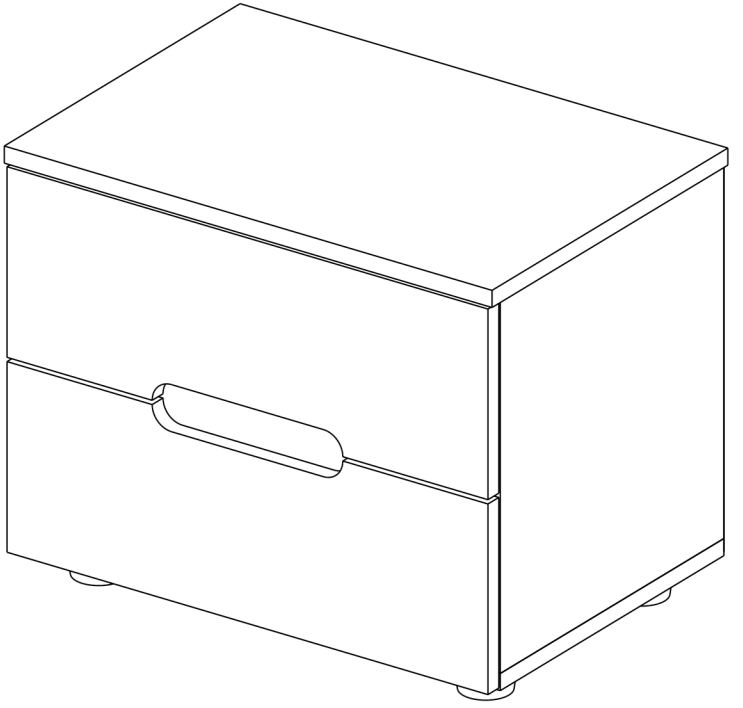

NIGHTSTAND ATHENA

pakketo

361-000019

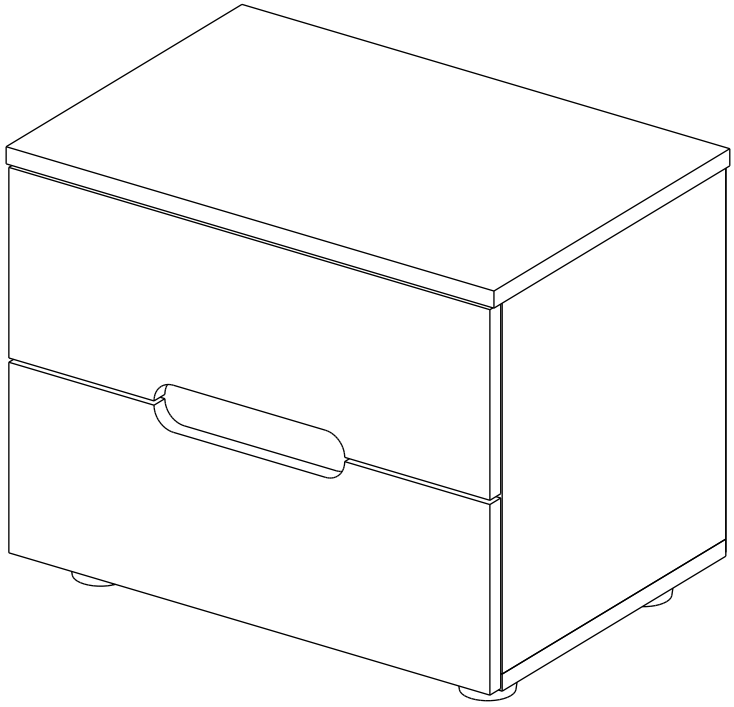

NIGHTSTAND ATHENA

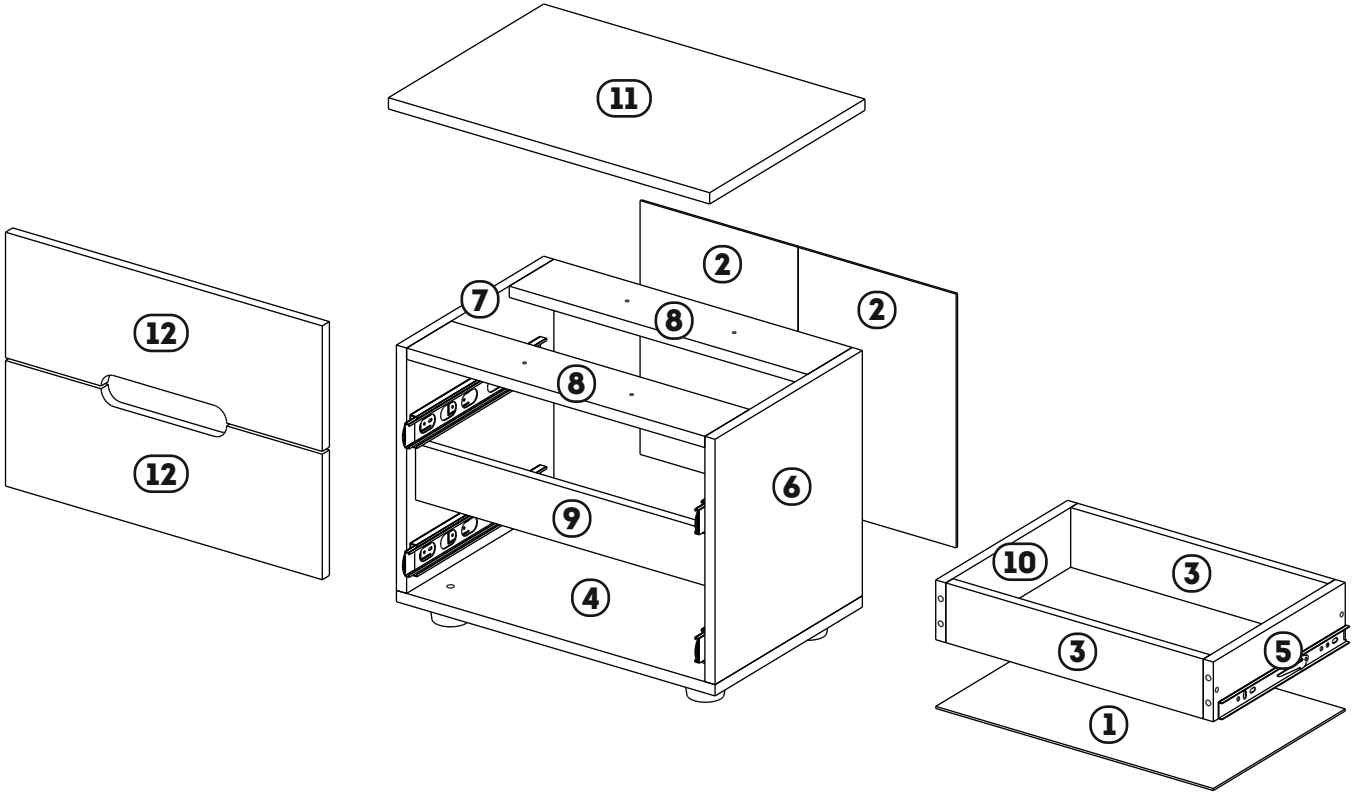
11
2
2
12
12
7
8
8
6
9
4
10
3
3
5
1

№	a*b	X	Pack
1	442x300	2	1/2
2	360x248	2	1/2
3	410x86	4	1/2
4	500x330	1	1/2
5	300x86	2	1/2
6	348x330	1	1/2
7	348x330	1	1/2
8	100x468	2	1/2
9	468x80	1	1/2
10	300x86	2	1/2
11	504x348	1	1/2
12	178x497	2	2/2

Telescopic Guide
300 мм
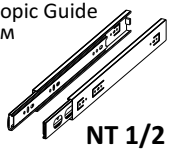
x2 **NT 1/2**

Minifix

x6 **M1**

Confirmat
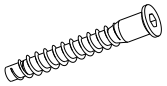
x12 **A1**

Minifix Screw
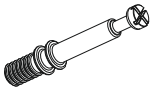
x6 **M2**

Dowel
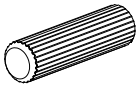
x14 **C1**

Screw
3,5x16
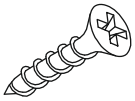
x16 **W1**

Screw
3,5x30
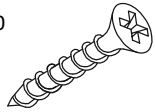
x12 **W3**

Nail
1x16
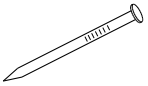
x45 **K1**

Cap for confirmate
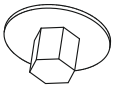
x12 **A2**

Lining (Manhattan)
30мм
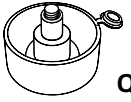
x4 **Q3**

Joining Strip
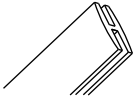
x1 **ZP**

Confirmation Key
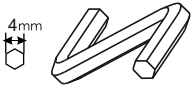

x1 **A3**

Cap for Minifix
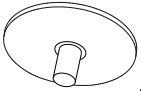
x6 **M3**

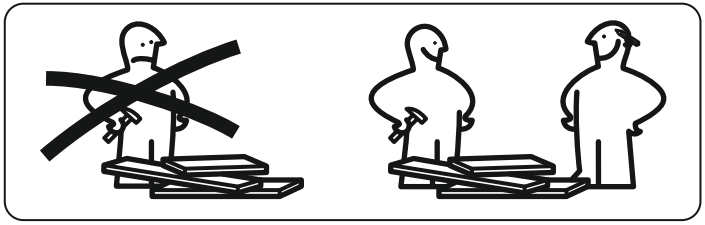

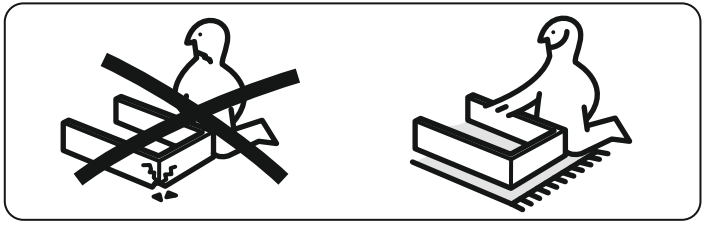

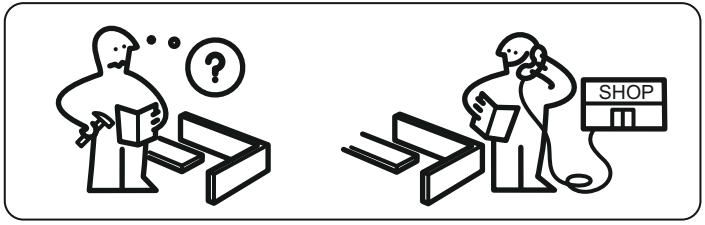

GENERAL TECHNICAL INSTRUCTIONS FOR FURNITURE ASSEMBLY

- CHECK COMPATIBILITY OF PARTS AND ACCESSORIES BEFORE ASSEMBLY.
- FOR FURNITURE ASSEMBLY, WE RECOMMEND USING THE SERVICES OF QUALIFIED SPECIALISTS.
- DO ASSEMBLY ON A SURFACE COVERED WITH CLOTH OR CARDBOARD TO PREVENT SCRATCHES.

CARE AND MAINTENANCE OF FURNITURE

- KEEP THE FURNITURE FROM PROLONGED CONTACT WITH WATER OR HOT STEAM.
- ENSURE SUFFICIENT DISTANCE FROM ELECTRICAL APPLIANCES AND HEATERS.
- IF THERE IS DIRTY ON THE FURNITURE, REMOVE IT WITH A DAMP CLOTH AND THEN WIPE IT DRY. DO NOT USE ABRASIVE MATERIALS.

1

Screw
3,5x16

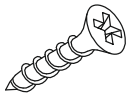

x8 W1

Telescopic Guide
300 мм

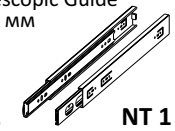

x2 NT 1

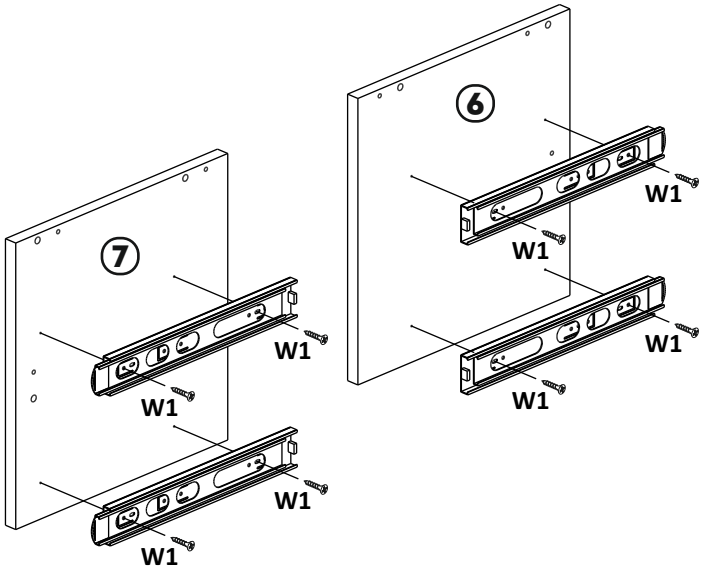

2

Minifix Screw

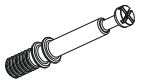

x6 M2

Dowel

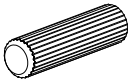

x3 C1

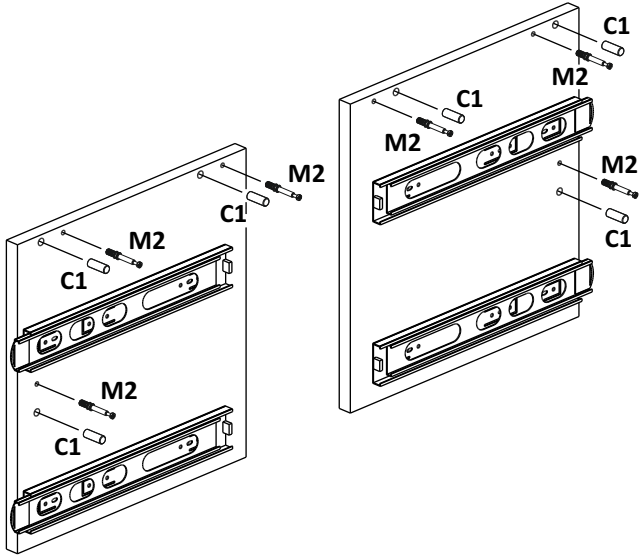

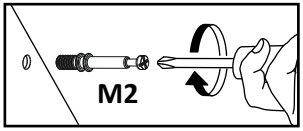

3

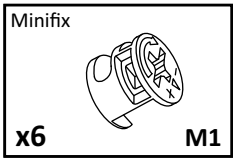

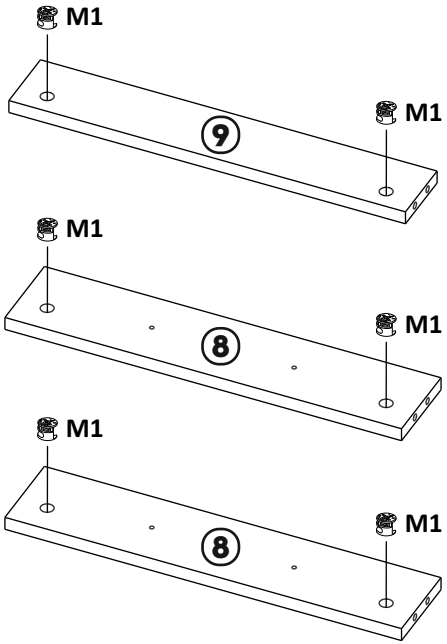

4

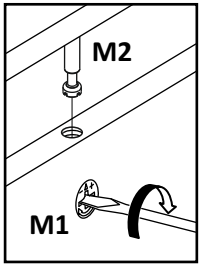

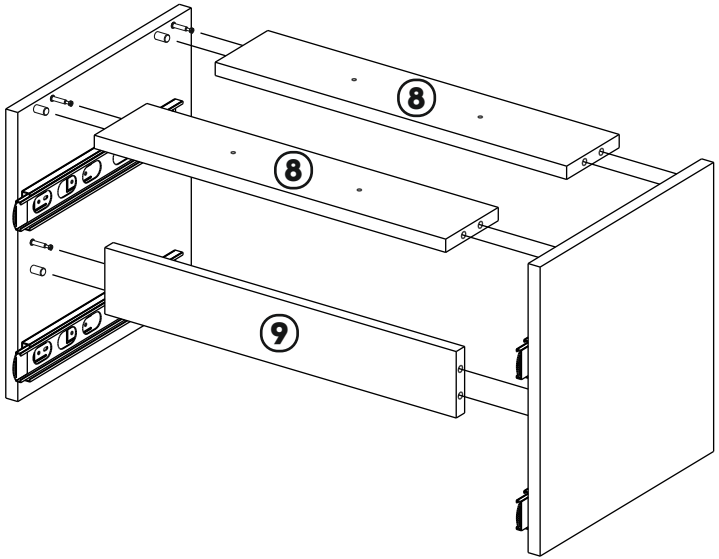

5

Confirmat
x4 A1

Screw 3,5x30
x4 W3

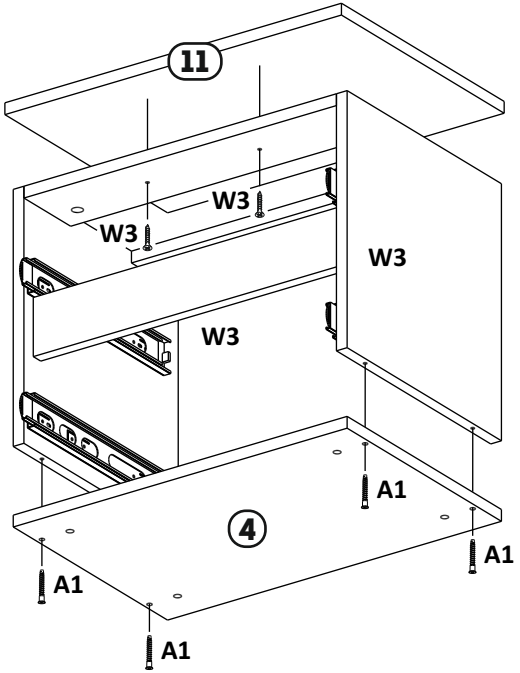

6

Nail 1x16
x17 K1

Joining Strip
x1 ZP

Lining (Manhattan) 30мм
x4 Q3

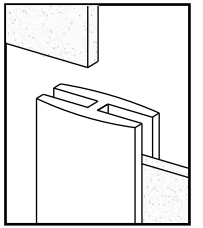

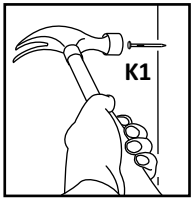

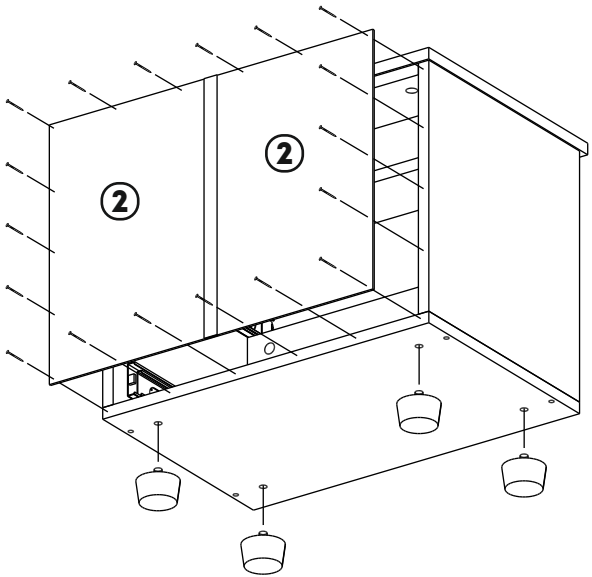

7

Confirmat

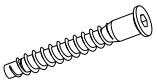

x8 A1

Cap for confirmate

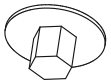

x8 A2

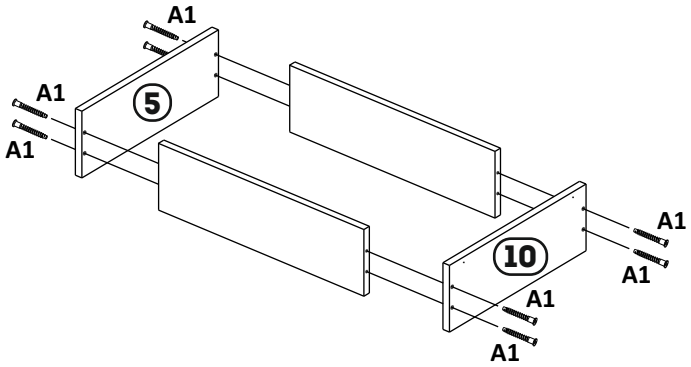

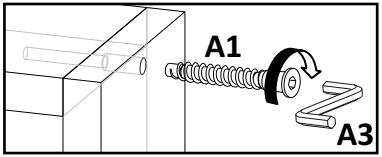

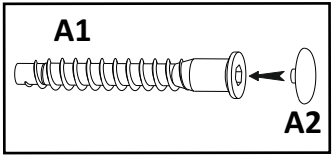

8

Screw
3,5x16

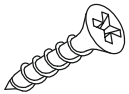

x4 W1

Telescopic Guide
300 мм



x1 NT 2

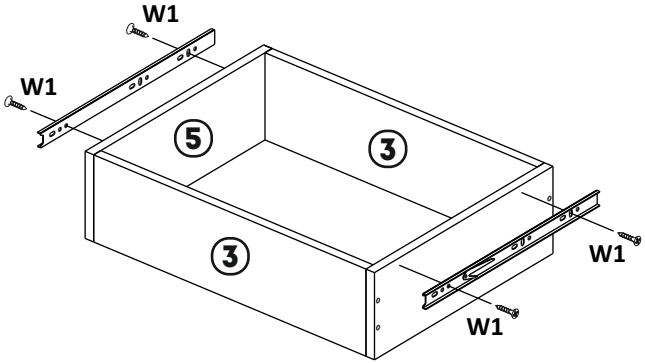

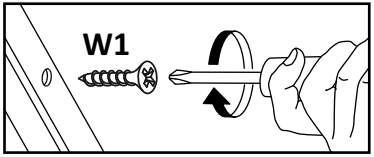

9

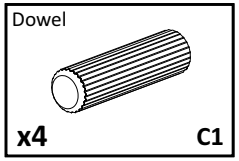
Dowel
x4
C1

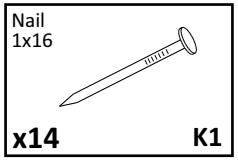
Nail
1x16
x14
K1

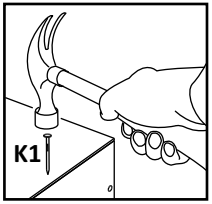
K1

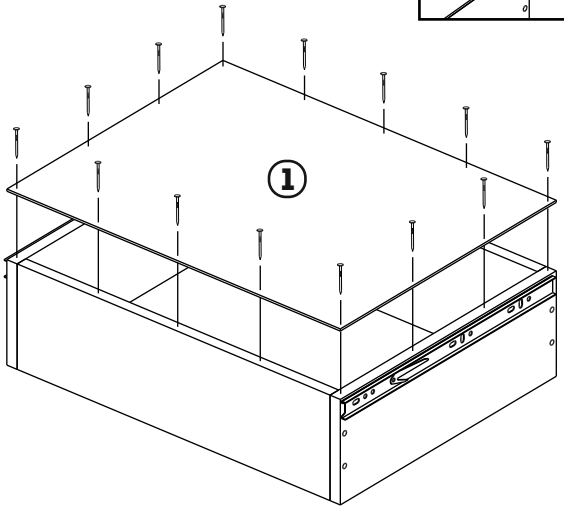
1

10

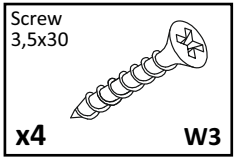
Screw
3,5x30
x4
W3

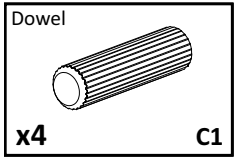
Dowel
x4
C1

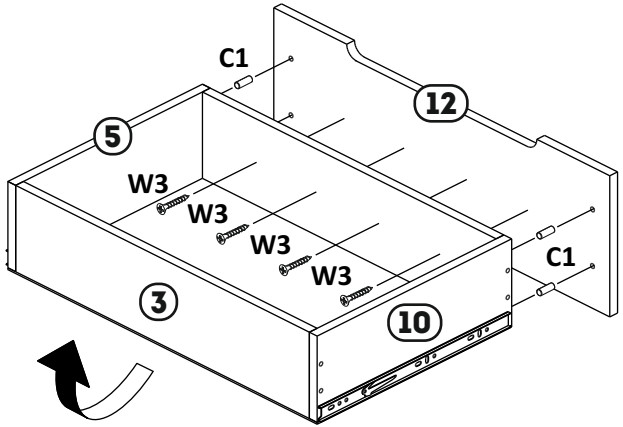
C1
12
5
W3
W3
W3
W3
C1
3
10

11

