ΟΔΗΓΙΕΣ ΣΥΝΑΡΜΟΛΟΓΗΣΗΣ / ASSEMBLING INSTRUCTIONS / Инструкция за сглобяване

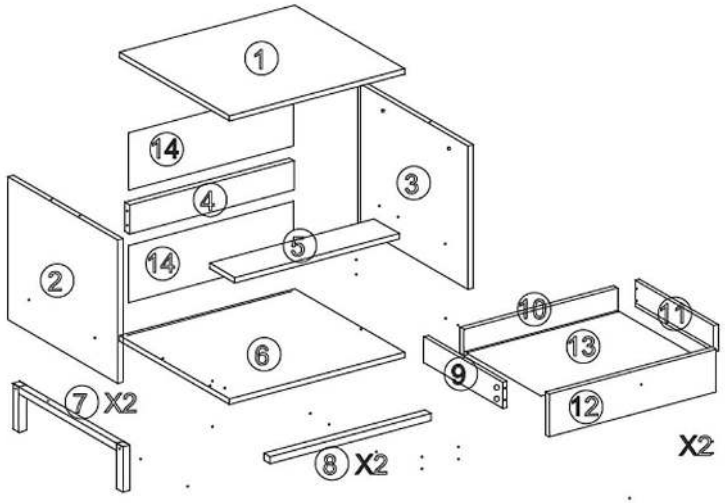

P1			x 18
P2			x 18
P3		M5x40mm	x 4
P4		M4x35mm	x 10
P5		M8x30mm	x 10
P6	CL DL DR CR		2 SETS
P7		M3.5x12mm	x 26
P8		M6x30mm	x 8
P9		M6x35mm	x 4
P10			x 1
P11		M4x14mm	x 4
P12			x 2
P13			x 2
P14			x 4
P15			x 2

1

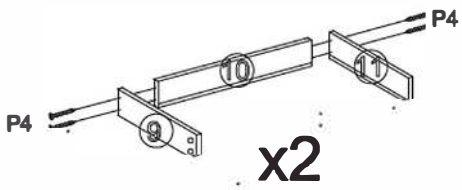

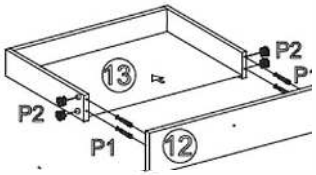

2

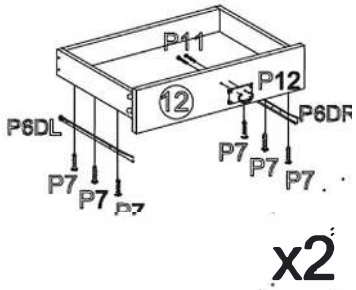

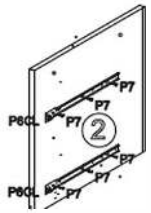

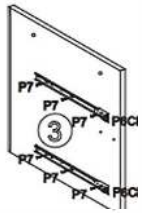

3

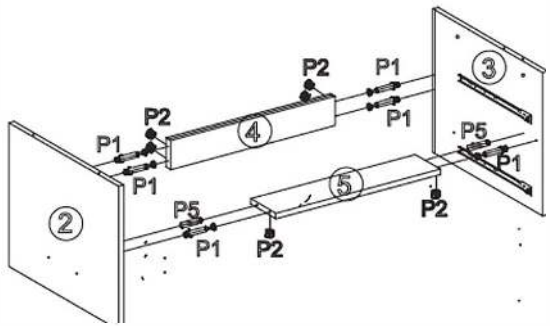

5

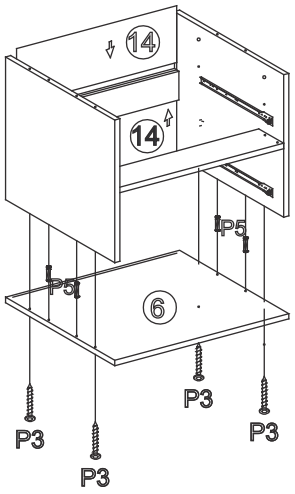
14
14
P5
P5
6
P3
P3
P3
P3

6

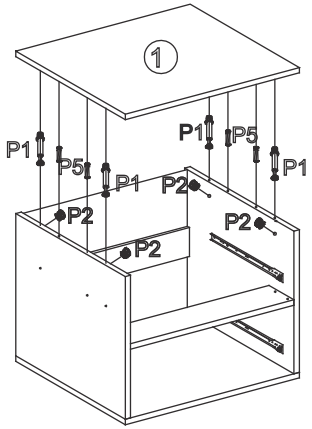
1
P1
P1
P5
P5
P1
P2
P1
P2
P2
P2

7

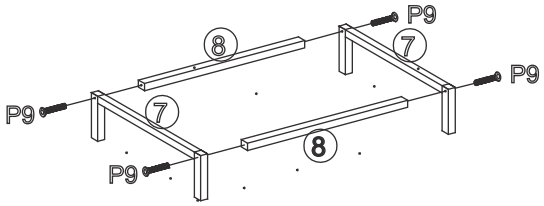
P9
8
7
P9
P9
7
8
P9

8

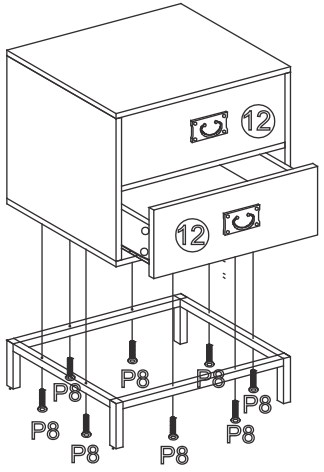
12
12
P8
P8
P8
P8
P8
P8
P8
P8

9

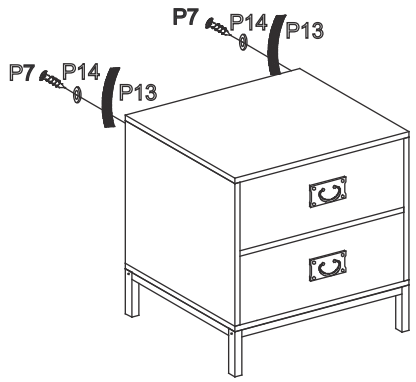

10

Απαραίτητη η στήριξη στον τοίχο

Mounting to the wall is required

Необходимо е да бъде захванато за стената

